Electrically operated 1800mm, complete with safety rail.

A height adjustable nursing bench that helps with the safe moving and handling of children and adults when they are being changed or showered. The height of the nursing bench can be adjusted simply by using the remote control. It is easy to fold up when not in use to maximise floor space.
Height adjustable 400mm.

The bench is made from practical and durable PVC canvas which is phthalate free.
The frame is Rilsan coated steel.
Materials: Steel, PVC.

Maximum Load: 150kg.

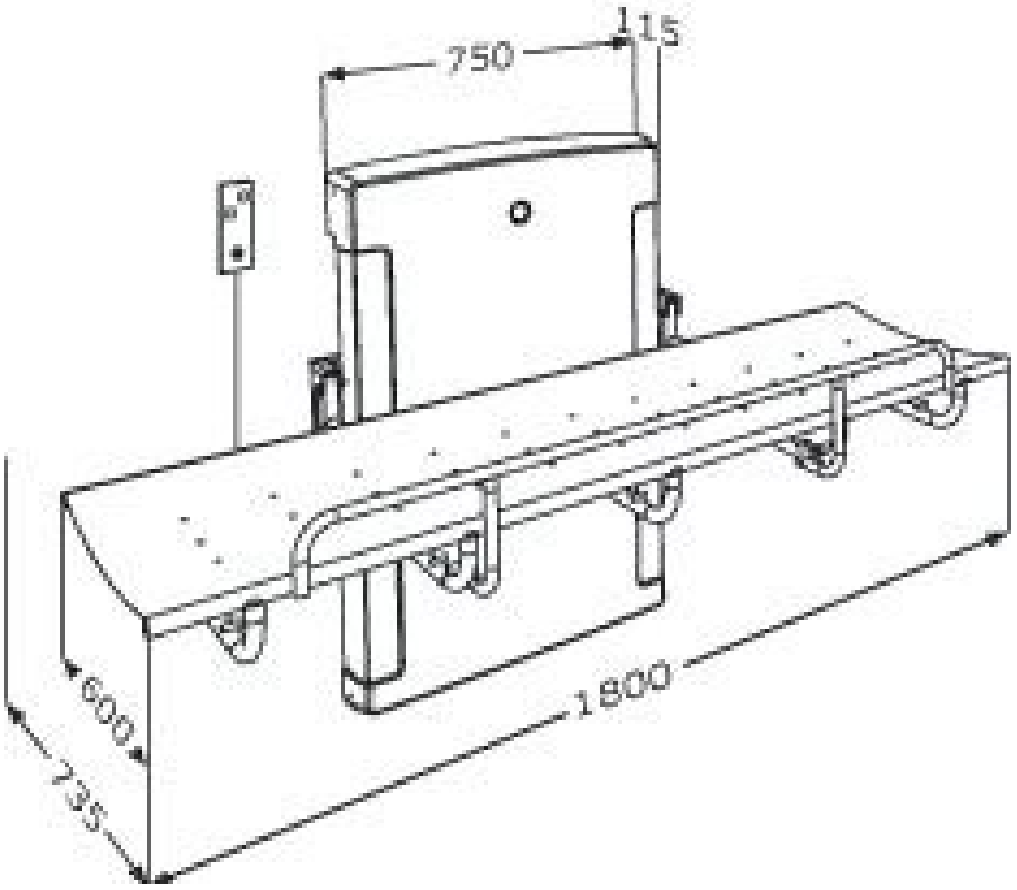

Closomat Ltd • Building 1 Brooklands Place, Brooklands Road, Sale, Cheshire M33 3SD
Tel: 0800 374076 • Fax: 0161 973 2711 • Email: info@closomat.co.uk • Web: www.closomat.co.uk